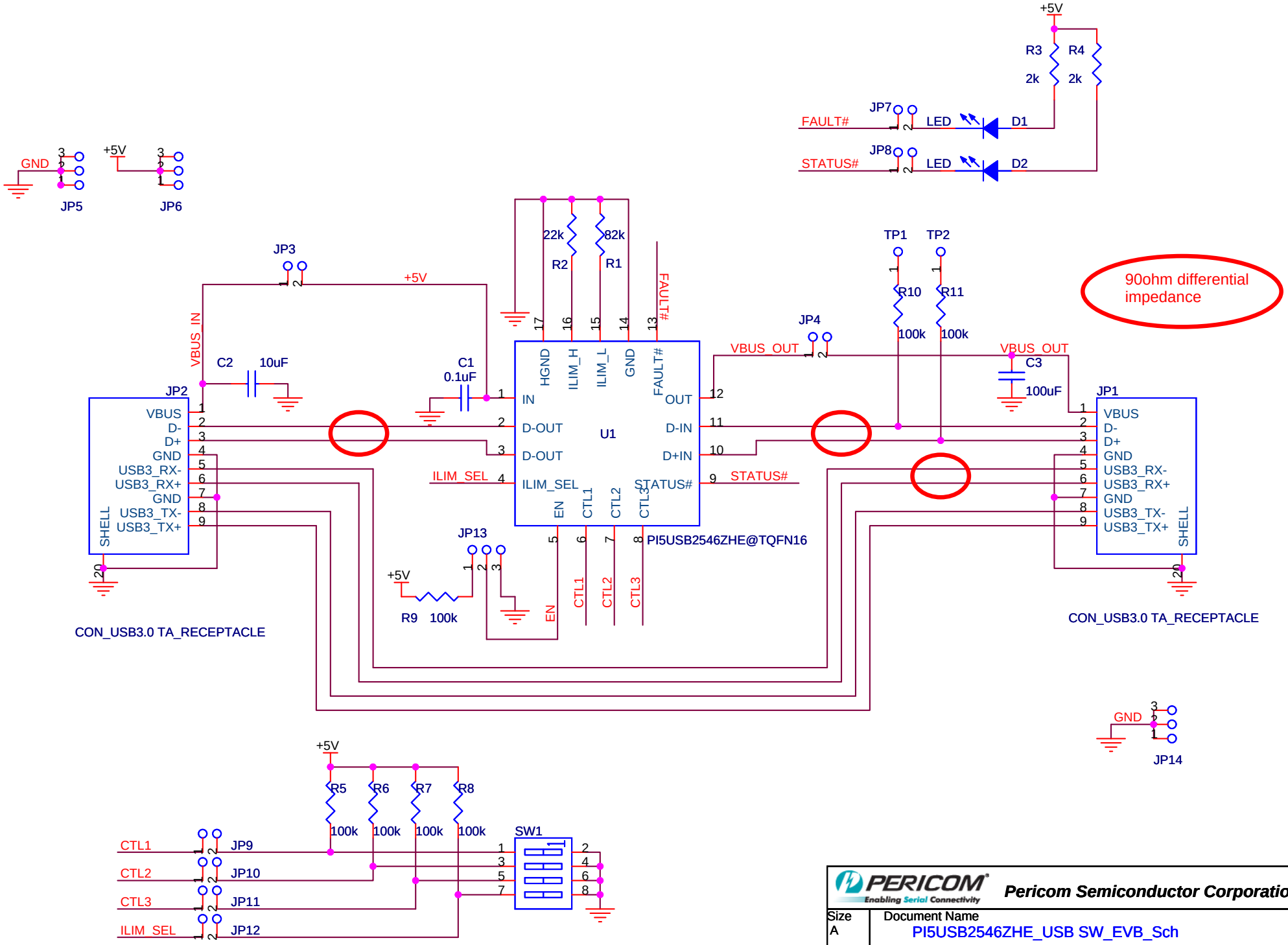

PERICOM Enabling Serial Connectivity

Pericom Semiconductor Corporation

Size	Document Name	Rev
A	PI5USB2546ZHE_USB SW_EVB_Sch	B

Date: Thursday, July 31, 2014 Sheet 1 of 1